# TECHNICAL DRAWING UTCC

Drawing Number: 14462 | All dimensions in mm | Need to scale

Isometric drawing

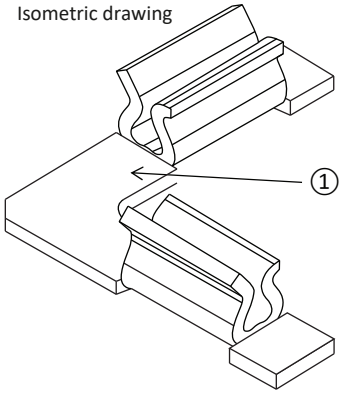


2d drawing

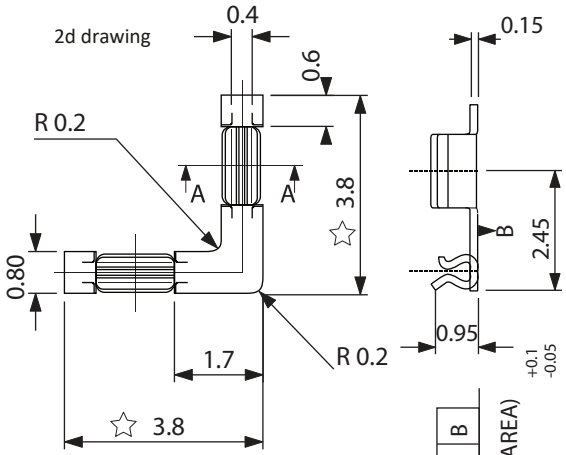


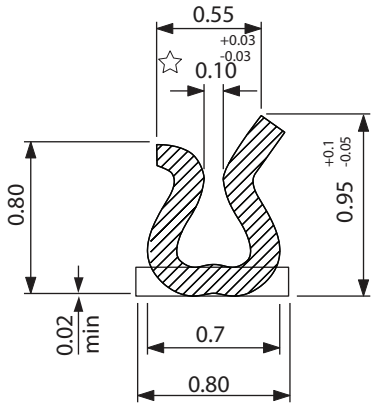


SELECTION A-A'

SELECTION A-A'

Plastic Carrier specification (Antistatic material)

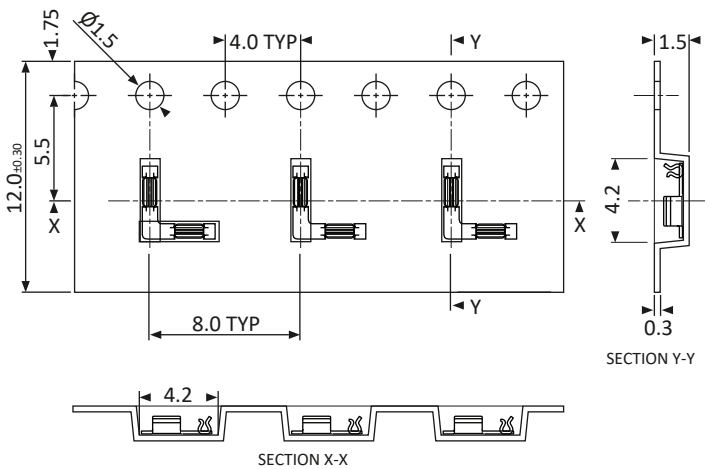


Recommended solder land size

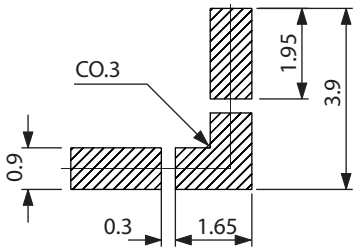


Soldering Land Pattern 0.1T

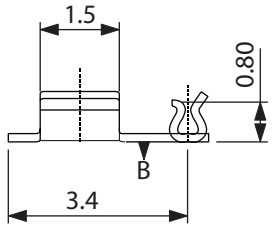


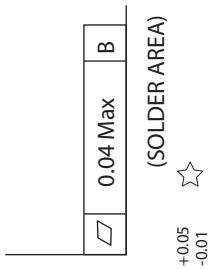


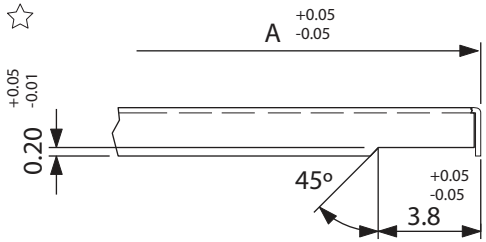


SHIELD CAN SPEC

Plastic reel drawing

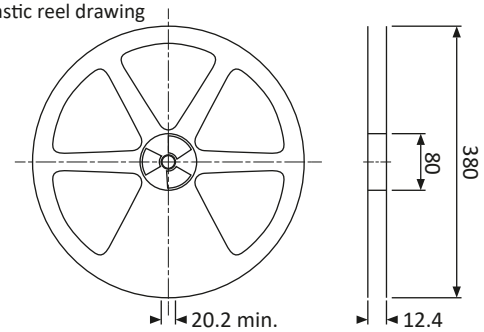


(Quantity per reel : 6.000)

Note

1. Material : Stainless steel SUS301-1/2H
2. Finish : Nickel (Ni) plated and afterwards matte tin (Sn) plated
3. Mechanical characteristics :
   - Insertion force : 0.1~2.0 kgf
   - Withdrawal force : 0.1~2.0 kgf
   - Durability : 10 Insertions Max.
   - Contact resistance : 100mΩ Max.
   - Shield thickness : 0.12 mm ~ 0.20 mm
4. Environmental characteristics :
   - Operating temperature range : -40°C TO +150°C
   - Storage temperature range : -40°C TO +85°C
   - Salt spray test : None corrosion
5. Meet Eu-RoHS

This specification will be changed without previous notice)

Characteristics of each material

| No. | Material Name | Specification | Material |
|---|---|---|---|
| 1 | Stainless steel | Thickness : 0.15 ± 0.01 | SUS 301-1/2H |

Reflow soldering condition

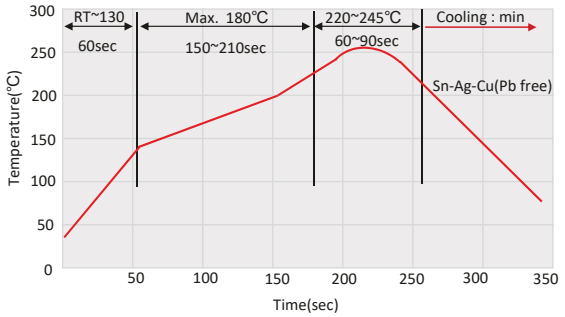


Holland Shielding Systems BV

Jacobus lipsweg 124
3316BP Dordrecht
the Netherlands

E-mail: info@hollandshielding.com
Phone: +31 (0)78 - 613 13 66
Fax: +31 (0)78 - 614 95 85

| | |
|---|---|
| Title: | Drawing Ultra Tiny Corner clip |
| Drawing: | Ultra Tiny Corner clip |
| Number: | 14462 |
| Date: | 12-05-2014 |
| Drawing by: | Christian van Vugt |
| Finish: | Tin over nickel |
| Dimention classification: | ★Critical<br>▼Major<br>( ) Reference |
| Tolerance | .X ±0.25<br>.XX ±0.10 |